Electrolux PROFESSIONAL

High Productivity Cooking Promix Electric Boiling Pan with Stirrer 150lt, 600mm tilting height

ITEM #

MODEL #

NAME #

SIS #

AIA #

232229 (SM6P150) Electric Boiling Pan 150lt with propeller, with 600mm tilting height

Short Form Specification

Item No.

AISI 304 stainless steel construction; deep drawn pan with rounded edges manufactured from AISI 316 stainless steel. Pan can be tilted beyond 90° to completely empty the food. Motorised tilting with tilting axis located at the front of the pan to keep the pouring lip high and allow tall vessels to be filled. Food is uniformly heated via the base and the side walls of the pan by an indirect heating system using integrally generated saturated steam at a temperature of 120°C in a jacket with an automatic deaeration system. Safety valve avoids overpressure of the steam in the jacket. Safety thermostat protects against low water level. Max pressure at 1,5 bar. Programmable water filling system. Hig flow propeller mixes at speeds up to 170 rpm (100-150 litres) and up to 140 rpm (200-300 litres). Continuous rotating in one direction for easier use. Step program facilitates removal of food. High thermal input and fast heat up. Electronic SMART control with possibility to store 50 programs; error message facility; display with: cooking time and temperature, water filling. Heavy duty balanced stainless steel lid, easy to remove and turn to facilitate cleaning. The insulation allows a lower temperature on the outer panels. The foamed termal insulation guarantees a cool upper edge of the cooking vessel surface. IPX5 water protection. For freestanding installation one left column is necessary for each unit. 600mm tililtng height.

APPROVAL:

Main Features

- 600 mm tilting height minimum.
- Food is uniformly heated through the base and side walls of the pan by an indirect heating system which uses integrally generated saturated steam at a temperature of 120°C in a jacket with an automatic deaeration system.
- Fast working thanks to the high efficient heating technology and well insulation that keeps the heat inside the well.
- Electronic control with possibility to store up to 50 programs, large display for easy use and a complete control over the following functions: start, cooking time, temperature, water filling and mixing speed.
- Curved pan base guarantees that the appliance ia also suitable to prepare small quantities of food.
- Constructed to meet the highest hygiene standards.
- Compliant to CE requirements for safety.
- Safe thanks to the higher water protection IPX5 and the lower temperature outside the panels.
- Isolated upper well rim avoids risk of harm for the user.
- High thermal input and fast heat up.
- Safety thermostat protects against low water level.
- Safety valve avoids overpressure of the steam in the jacket.
- OPTIONS (to be ordered with the machine and must be installed in the factory):
  - Automatic water filling - makes it possible to preset the desired quantity of water
  - Automatic cooling - allows cooling down of the food connecting the jacket to the tap network
  - Food sensor - placed on the bottom of the vessel, it provides efficient temperature control even with small amounts of food. Can be connected to HACCP integrated system
  - Spray gun - integrated spray unit

Construction

- Ergonomic and user friendly thanks to the high tilting position and the pouring lip design which allow to easily fill containers.
- Heavy duty, balanced stainless steel lid with sliding plastic cover to insert ingredients. Easy to remove and turn to facilitate cleaning.
- Tilting axis located at the front and upper position of the pan to keep the pouring path short when filling different types of vessels.
- Vessel can be tilted beyond 90° to completely empty the food.
- Motorised tilting.
- Max pressure 1,5 bar.
- AISI 304 stainless steel construction with AISI 316 stainless steel deep drawn pan with rounded edges.
- Variable speed agitator moves at up to 170 rpm (for 100 to 150 liters) and up to 140 rpm (for 200 to 300 liters) and is strong and fast enough to mix even compact food, such as mashed potatoes.

Sustainability

- High-quality thermal insulation of the pan saves energy and keeps operating ambient temperature low.

Optional Accessories

• Strainer 150lt	PNC 928026	❑
• Kit for a correct and easy positioning and installation of 150-300 lt pan (for a correct installation you need 2 for each pan)	PNC 928030	❑
• Floor fastening kit for left leg/column (fastening is integrated in the floor)	PNC 928031	❑
• Floor fastening kit for 150-300 lt right leg/column (fastening is integrated in the floor)	PNC 928033	❑
• Floor fastening kit for left leg/column (fastening on the floor surface)	PNC 928034	❑
• Floor fastening kit for 150-300 lt right leg/column (fastening on the floor surface)	PNC 928036	❑
• Trolley to store tools for 5 boiling pans	PNC 928043	❑
• Trolley to store tools for 2 boiling pans	PNC 928044	❑
• Distance ring for connection (to previous version of pan)	PNC 928049	❑
• Short brush for connection to boiling pan spray unit	PNC 928082	❑
• Long brush for connection to boiling pan spray unit	PNC 928083	❑
• Cleaning tool for Promix boiling pans, 150lt	PNC 928125	❑
• Left column including with bearing and cover for boiling pans, with 600mm tilting height	PNC 928150	❑
• Right column cover plate for 150-300lt boiling pans with 400mm tilting height (to be used when matched with boiling pans of 600 mm tilting height)	PNC 928152	❑

The company reserves the right to make modifications to the products without prior notice. All information correct at time of printing.

High Productivity Cooking Promix Electric Boiling Pan with Stirrer 150lt, 600mm tilting height

Front

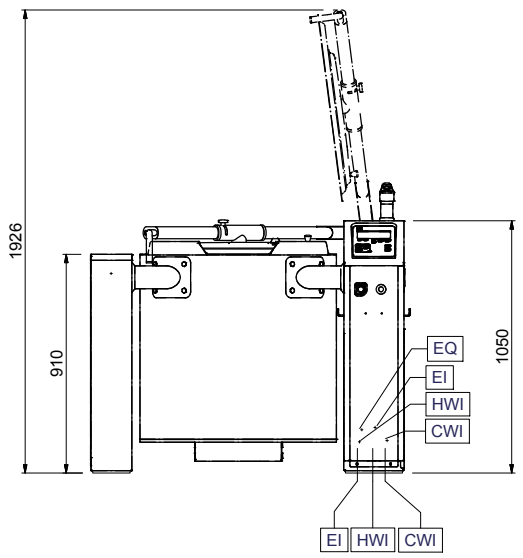

Side

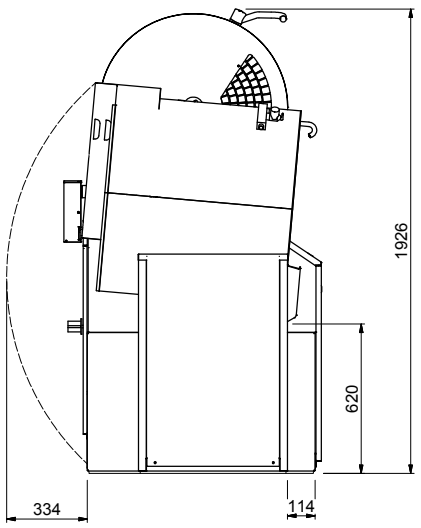

CWI1 = Cold Water inlet 1 (cleaning)
EI = Electrical inlet (power)
HWI = Hot water inlet

Top

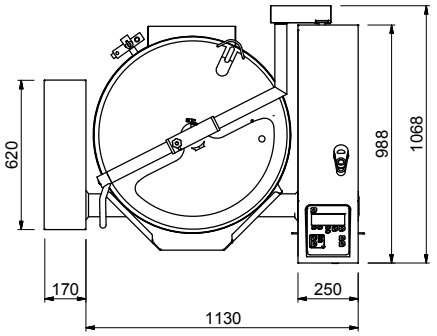

Electric

Supply voltage:	
232229 (SM6P150)	400 V/3N ph/50-60 Hz
Electrical power max.:	32.2 kW

Installation:

Distance back floor tilted:	620 mm

Key Information:

Working Temperature MIN:	30 °C
Working Temperature MAX:	121 °C
Vessel (round) diameter:	695 mm
Vessel (round) depth:	500 mm
External dimensions, Width:	1300 mm
External dimensions, Depth:	1070 mm
External dimensions, Height:	1050 mm
Net vessel useful capacity:	150 lt
Tilting mechanism:	Automatic
Bearing:	Front

The company reserves the right to make modifications to the products without prior notice. All information correct at time of printing.